Safety Regulation Group
Engineering Department - Structures and Materials Branch

6 June 2006

Our Ref 9/97/CtAw/13/34/35

LETTER TO OWNERS/OPERATORS NO 2897
INSPECTION OF TAIL FIN SUPPORTS
BELL AND AGUSTA-BELL 206 A/B/L SERIES AIRCRAFT

Introduction

Following a fatal accident to a Bell 206B helicopter in December 2005, the AAIB investigation has revealed that the vertical tail fin departed the aircraft, entered the tail rotor arc, resulting in loss of the tail rotor and fin and catastrophic failure of the aircraft. Full details can be found in AAIB Special Bulletin S1/2006.

Investigation by the AAIB has revealed fatigue cracking of the fin support brackets that connect the fin to the tailboom. The cracks appear to be through and around all four connecting bolt holes.

A review of the service history of the aircraft type has not revealed evidence of multiple occurrences of cracking in this area. Of the three known instances of cracking in the world fleet, this is the first recorded fatal accident.

This LTO is being issued to request all operators of Bell and Agusta Bell 206 A/B/L series aircraft, which have a similarly designed fin attachment structure to that of the fatal accident helicopter, to perform a torque check of the four bolts that connect the fin to the support brackets and an inspection of those fin support brackets. (See Figure 1 of this LTO). The findings from these inspections will be used to assist the AAIB in their investigation.

Applicability

Compliance with the actions noted below is requested for all Bell and Agusta Bell 206 A/B/L aircraft except those where the connection of the fin to the tail boom support structure uses a barrel nut, as noted in BHT-206A/B series MM-5 Figure 53-3. See also step 1 of ‘Compliance.’

Note: Later production standard consists of a one piece cast Vertical fin/tail rotor gearbox support unit, in place of the earlier fabricated design. The cast unit uses barrel nuts, where as the fabricated design uses conventional nuts.

Compliance

At the next 100hr scheduled maintenance input:-

1. Remove the tail rotor gearbox fairings in accordance with applicable Maintenance Manual instructions. Establish whether the fin attachment structure uses barrel nuts. If barrel nuts are present, no inspection is necessary, replace fairings in accordance with applicable Maintenance Manual instructions. (A directed inspection is necessary to confirm the build standard of the helicopter, as modification/repairs may have resulted in an alteration from the original build standard).

2. Prior to removal of the fin, check and record the torque value needed to loosen the fin to support bracket connecting bolts.

3. Remove the fin in accordance with applicable Maintenance Manual instructions. Follow all Cautions and Warnings in the applicable MM section, to avoid damaging the fin support structure.

4. Inspect in accordance with applicable Maintenance Manual instructions the vertical fin at its attachment points for looseness, cracks, elongation of bolt holes, distortion and corrosion.

5. Inspect the removed attachment bolts in accordance with applicable Maintenance Manual instructions, for wear and thread damage. Replace as necessary.

6. Inspect the brackets that form the fin attachment structure (aft fin support, see LTO Fig 1) of the tail boom in accordance with the following instructions:
   6.1 Remove the paint using an appropriate Bell/Agusta Bell approved technique in the area of the bolt holes, both on the inside and outside of the brackets (four places).
   6.2 Inspect the four attachment holes for thread marks. Any marks must be removed and assessed in accordance with Bell/Agusta Bell approved data.
   6.3 Inspect the paint stripped area of the fin attachment brackets using dye penetrant method for cracks. Refer to BHT-ALL-SPM.
   6.4 If cracks are found replace the fin support in accordance with Bell/Agusta Bell approved instructions.
   6.5 If no cracks are found, re-protect in accordance with applicable Maintenance Manual instructions.

7. If no cracking is found, install the fin in accordance with applicable Maintenance Manual Instructions taking care to support the structure appropriately and so prevent damage to the fin support structure during bolt installation. Ensure new nuts are used and that the correct torque is applied to the bolts (note the requirement to add the tore (run-down) torque to the MM specified torque requirement, ref BHT-ALL–SPM)

8. Record compliance with this LTO in the aircraft maintenance records/ log book together with the applied torque figure.

9. Complete the pro-forma attached with the following information:
   9.1 The connecting bolt torque value, required in Compliance step 2, prior to fin removal, and
   9.2 The results of the inspections required in Compliance step 6.2 & 6.3.

Contact

Enquiries regarding this LTO and completed pro-forma should be sent to Rory Martin, Structures and Materials Branch, Engineering Department at the address below:

Civil Aviation Authority
Floor 2E Aviation House Gatwick Airport South West Sussex England RH6 0YR
Phone +44 (0) 1293 573534 Fax +44 (0) 1293 573975

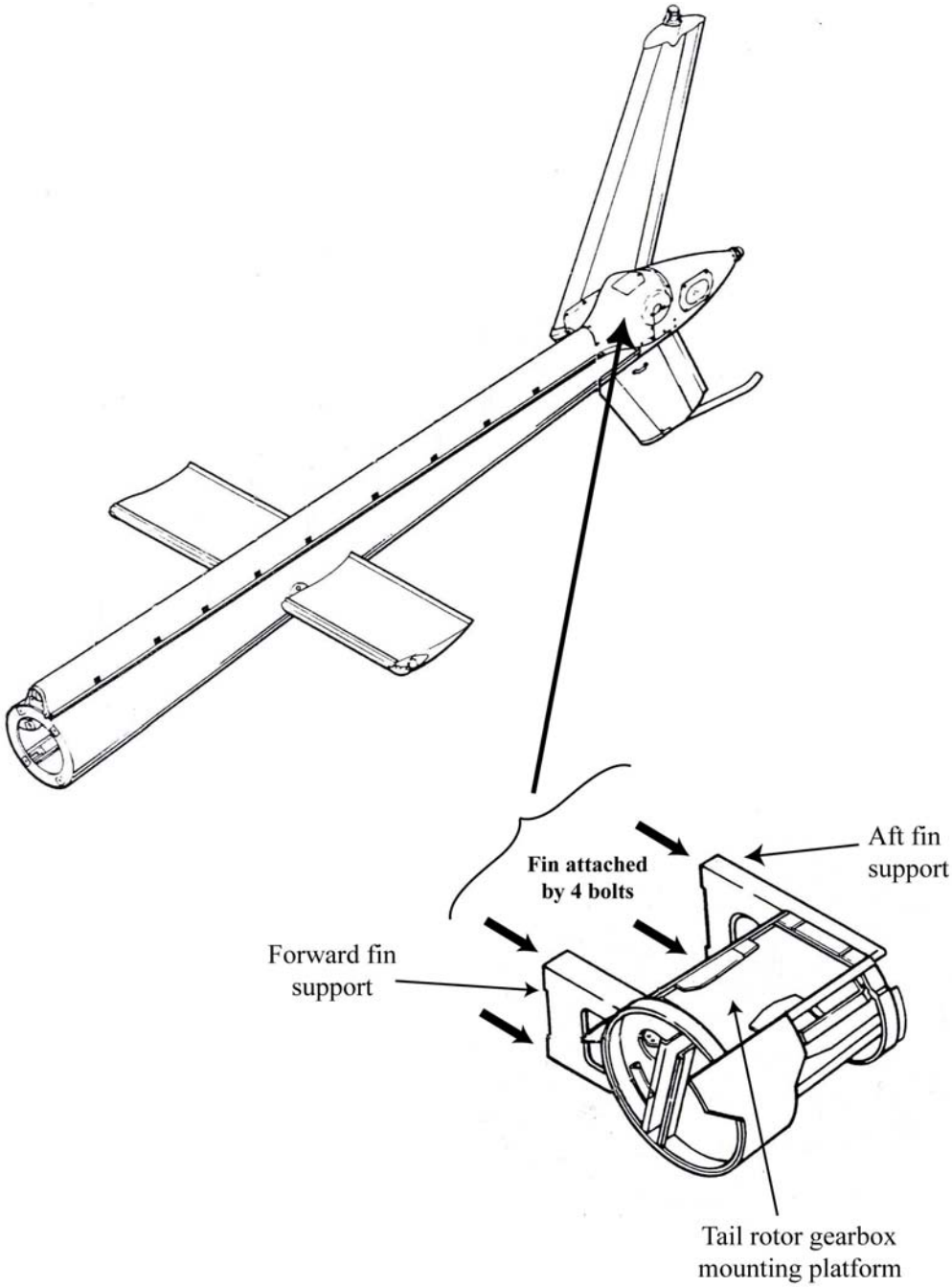

Figure 1
Tail boom and fin support details

Feedback Form

Helicopter Type:	
Registration:	
Owner/operator:	
Maintenance Organisation, including a contact point:	

Torque Values

Fin Attachment Bolt Location				
	Top Aft	**Top Fwd**	**Bottom Aft**	**Bottom Fwd**
Torque Value to Loosen the Bolt:				

Due to the initial torque required to get the bolt to move, it may be difficult to establish these torque values accurately. Please record below your comments on the validity of the figures recorded above.

Torque Value Comments

Results of inspections of attachment holes for thread damage and of the NDT (Dye Penetrant)

Fin Attachment Hole Location				
	Top Aft	**Top Fwd**	**Bottom Aft**	**Bottom Fwd**
Attachment bolt holes				
NDT result / finding				
Details of Crack found				

Return details:

Post: Mr Rory Martin, Engineering Dept, Structures and Materials Branch, CAA, Safety Regulation Group, Aviation House, Gatwick Airport South, W. Sussex, RH6 0YR.
Fax: 01293 573975.
E-mail: rory.martin@srg.caa.co.uk.