CIVIL AVIATION AUTHORITY – SAFETY REGULATION GROUP

MICROLIGHT TYPE APPROVAL DATA SHEET (TADS)

**NO:BM38 ISSUE: 3**

TYPE: Pegasus Quasar

(1) MANUFACTURER: Solar Wings Ltd, now supported by P & M Aviation Ltd, Unit B, Crawford St, Rochdale, Lancashire, OL16 5NU.

(2) UK IMPORTER: N/A

(3) CERTIFICATION: BCAR Section S - Advance Issue March 1983 amended 11/10/88

(4) DEFINITION OF BASIC STANDARD: Solar WIngs Approval Submission - Document Ref No. Sw-405-32

(5) COMPLIANCE WITH THE MICROLIGHT DEFINITION

| | | |
|---|---|---|
| (a) | MTOW | 382kg |
| (b) | No. Seats | 2 |
| (c) | Maximum Wing Loading | 25kg/m² |
| (d) | Vso | 26mph CAS |
| (e) | Permitted range of pilot weights | 55 – 90 kg per seat. |
| (f) | Typical Empty Weight (ZFW) | 173 kg |
| (g) | ZFW + 172 kg crew + 1 hr fuel (17litres /12 kg) | 357 Kg |
| (h) | ZFW + 86 kg pilot + full fuel (42 litres / 30kg) | 289kg |
| (i) | Max ZFW at initial permit issue | 180kg |

(6) POWER PLANTS

| Designation | Quasar |
|---|---|
| Engine Type | Rotax 503-1V Upright (single ign.) |
| Reduction Gear | Rotax Gearbox 2:58:1 |
| Exhaust System | Rotax Side Mounted (with after muffler) |
| Intake System | Rotax intake silencer with K & N Intake Filter |
| Propeller Type | Arplast 162 |
| Propeller Dia x Pitch | 162 cm Dia Settable Pitch 14° at 53.5 cm |
| Noise Type Cert No. | 126M Iss 3 |
| AAN approving configuration | **21604P** |

(7) MANDATORY LIMITATIONS:

(A) Max Take-Off Weight 382kg
(B) CG Limits *N/A*
(C) CG datum Front Wheel Axle
(D) Cockpit Loadings

| | Port | Starboard | Total |
|---|---|---|---|
| Min | 55kg | - | 55kg |
| Max | 90kg | 90kg | 180kg |

(E) Never Exceed Speed 82mph
(F) Manoeuvring Speed 60mph
(G) Permitted Manoeuvres Max 30° Nose up / 30° nose down
Non Aerobatic, max 60° bank
Normal acceleration flight limits, +4 / -0g

(H) Fuel Contents (Max Useable) 42 L

(I) Power Plant See Table

| | | | | |
|---|---|---|---|---|
| Engine | Rotax 503-1V | | | |
| Max RPM | 6800<br>6500 Cont | | | |
| MAX CHT | 250°C | | | |
| MAX EGT | 650°C | | | |
| Fuel Spec | 83 MON or 90 RON minimum unleaded to BS(EN)228 or 97+ octane 4-star /MOGAS leaded fuel to BS 4040, or AVGAS 100LL. | | | |
| Engine Oil Spec | Non Deterg<br>2 Stroke<br>Self Mix | | | |
| Gearbox oil spec | EP 90 | | | |
| Fuel/Oil Mix | 50:1 | | | |
| Coolant Temperature | N/A | | | |
| Oil Pressure | N/A | | | |
| Oil Temperature | N/A | | | |
| Fuel Pressure | 0.2-0.4 bar | | | |

(8) INSTRUMENTS REQUIRED:

| ASI | Altimeter | RPM | CHT / EGT | Compass | Coolant temp | Fuel Pressure | VSI | Slip ball |
|---|---|---|---|---|---|---|---|---|
| Required (to 100mph min.) | Required | Optional | Optional | Optional | Optional | Optional | Optional | N/A |

(9) CONTROL DEFLECTIONS:

N/A Weightshift flexwing, control movements limited by main structure.

(10) PILOT'S NOTES, MAINTENANCE MANUALS REFERENCES:

10.1 Manuals approved for use with this aircraft**.**

(a) Document Ref SW-406-12

10.2 The following placards are to be fitted:-

(a) Flight Limitations Placard (to be visible to pilot)
See Annex D.

(b) Engine Limitations Placard (to be located near to engine instruments)
See Annex D.

(c) Fuel Limitations Placard (to be located near to filler cap)

A placard is to be fitted showing fuel capacity fuel type(s) and fuel:oil ratio. An example is shown at Annex D.

(d) Switches
See Annex D.

(10) MANDATORY MODIFICATIONS / SERVICE BULLETINS / AIRWORTHINESS DIRECTIVES ETC:

| Service Bulletin ref. | Description | Notes | Issued |
|---|---|---|---|
| SB0027 | Fuel tank seal | Compulsory | 9/9/89 |
| SB0028 | Undercarriage strut preload | Compulsory | 10/1/91 |
| SB0031 | Conversion of Quasar to Quasar TC | Optional | 15/11/91 |
| SB0032 | Inspection of T.E. root | **MANDATORY** | 22/8/91 |
| SB0036 | New Pylon Fairing fitting | Optional | 18/5/92 |
| SB0039 | Brake cables | **MANDATORY** | 26/3/93 |
| SB 0086 | Inspection of swages | Compulsory | 20/05/97 |
| SB0090 | Roll bearing bolt security | Advisory | 17/09/97 |
| SB0091 | Roll bearing flange cracking | Advisory | 06/04/98 |
| SB0095 | Seat belt buckle on s/n 7428-7456 | Advisory | 30/07/98 |
| SB0109 | Component life extension | Advisory | 21/3/02 |

See Annex A for required modifications.

Annual Bettsometer test is to be carried out to 1360 grammes with wing sails fitted and tensioned to flight. Test must be to both upper and lower surfaces.

(12) MINIMUM PERFORMANCE AT MAX TAKE-OFF WEIGHT

| | |
|---|---|
| Rate of Climb: | 500 ft/min (Rotax 503-2v engine) |
| Climb Speed: | 46 mph (40 kts, 74 kph) IAS |
| Stall or Minimum Flying Speed: | 26 mph (23 kts 42 kph) IAS MaxTOW at idle |

CIVIL AVIATION AUTHORITY – SAFETY REGULATION GROUP

MICROLIGHT TYPE APPROVAL DATA SHEET (TADS)

**NO:BM38 ISSUE: 3**

Issue History

| Issue No | Date. | Reason and signatory |
|---|---|---|
| 1 | May 1990 | J. Watkins |
| 2 | 1 April 2003 | New format<br>J BARRATT |
| 3 | 06/07/05 | New company name |

J Barratt

CIVIL AVIATION AUTHORITY – SAFETY REGULATION GROUP

MICROLIGHT TYPE APPROVAL DATA SHEET (TADS)

**NO:BM38 ISSUE: 3**

Illustration of Aircraft - 3 View

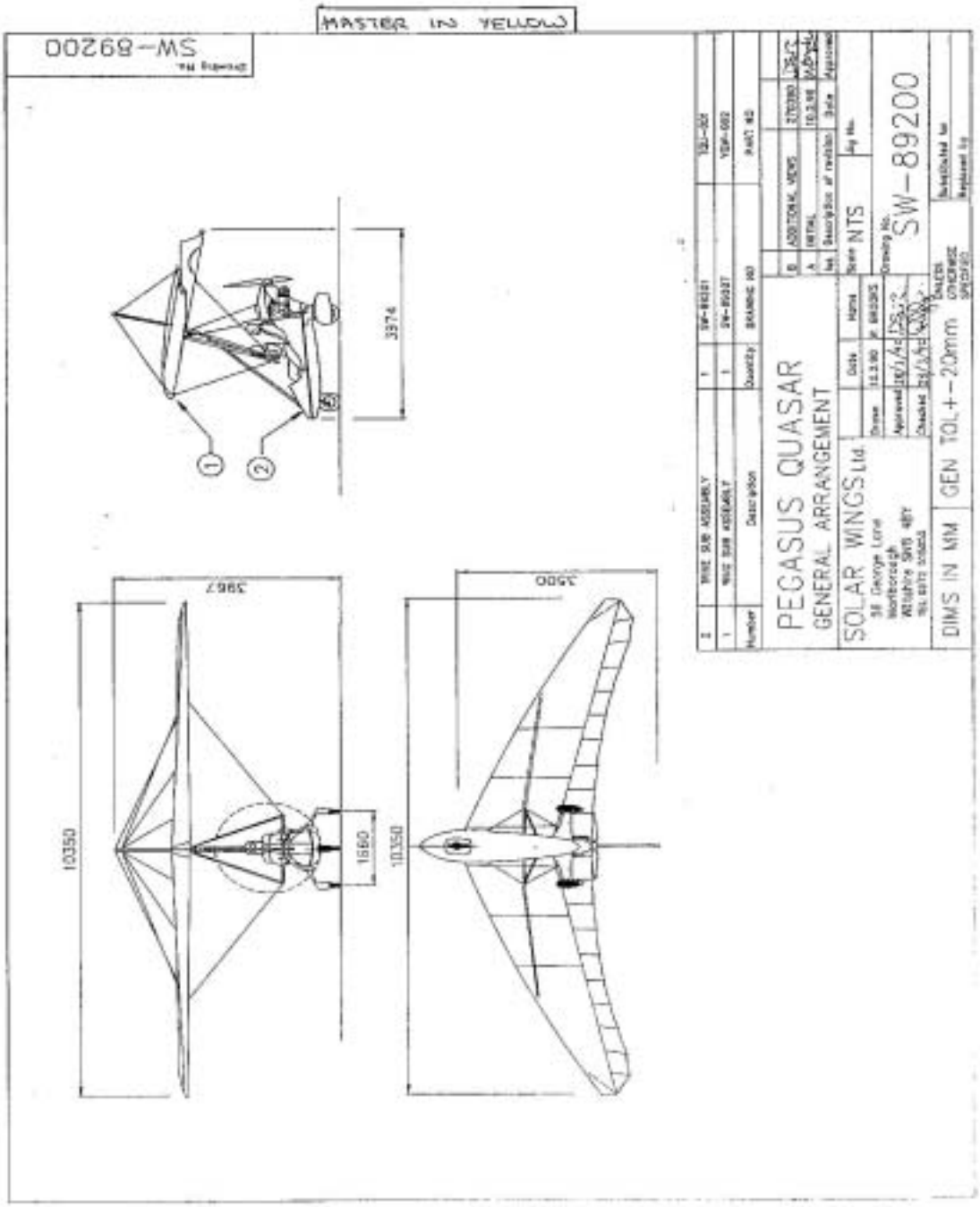

CIVIL AVIATION AUTHORITY – SAFETY REGULATION GROUP

MICROLIGHT TYPE APPROVAL DATA SHEET (TADS)

**NO:BM38 ISSUE: 3**

ANNEX A – MANDATORY MODIFICATIONS

1.

| Mod ref. | Description | Notes | Issued |
|---|---|---|---|
| SW0067 | PICKUP PLATE AND FUEL DRAIN | MINOR | 11/12/90 |
| SW0082 | Q1 WING, QUASAR, SAIL T/E PATCH | MINOR | 05/09/91 |
| SW0084 | Q1 WING, QUASAR SAIL T/E ANTI ABRASION PATCH | MINOR | 05/09/91 |

ANNEX B - APPROVED OPTIONAL MODIFICATIONS

The installation of all optional modifications is to be inspected by a BMAA inspector and an entry made in the appropriate logbook(s). Note that other approved modifications may exist which are not listed here.

1.

| Mod ref. | Description | Notes | Issued |
|---|---|---|---|
| SW0068 | TWIN CARB R503 BOSCH SINGLE IGNITION | MAJOR OPTIONAL | 20/12/90 |
| SW0069 | TWIN CARB R503 DUCATI DUAL IGNITION | MAJOR OPTIONAL | 20/12/90 |
| SW0070 | PRELOAD SPACERS IN REAR U/C | MINOR COMPULSORY | 17/04/91 |
| SW0071 | THROTTLE FOR ALL TYPES (HAND THROTTLE) FROM 20/01/91 | MINOR OPTIONAL | 17/04/91 |
| SW0074 | CARB. HEAT PLATE KIT | MINOR OPTIONAL | 17/04/91 |
| SW0075 | Q-WING, QUASAR WING EXTERNAL BUNGEE RETRACT SYSTEM | MINOR OPTIONAL | 17/04/91 |
| SW0076 | SPLIT REAR WIRE SYSTEM TO LIGHTEN ROLL | MINOR OPTIONAL | 15/07/92 |
| SW0080 | SPECIFICATION OF AEROQUIP 2556-4 FUEL HOSE | MINOR OPTIONAL | 05/09/91 |

| | | | |
|---|---|---|---|
| SW0081 | CONVERSION OF QUASAR TO QUASAR TC | MINOR OPTIONAL | 05/09/91 |
| SW0091 | NEW PYLON FAIRING (SEE SB 0036) | MINOR OPTIONAL | 15/07/92 |
| SW0096 | IMPROVED FRONT WHEEL & AXLE SYSTEM | MINOR OPTIONAL | 15/07/92 |
| SW0097 | NEW COCKPIT TOP MOULDING WITH SCREEN AND COMPASS | MINOR OPTIONAL | 15/07/92 |
| SW0099 | FITTING OF PRIMER BULB IN LINE (Note – see SB 110 – possible blockage) | MINOR OPTIONAL | 15/07/92 |
| PG28 | QUASAR U/C LEG MATERIAL CHANGE | MINOR | 10.1.95 |
| PG54 | QTM/QSR SEAT CUSHION ADJUSTMENT | MINOR | 16.11.95 |
| PG73 | BRONZE WELD -> TIG WELD ON QTM/QSR FORK LINKS | MINOR | 10.5.96 |
| PG92 | Q2 SAIL TAPING & NEW SEAM LAYOUT | MINOR | 10.5.96 |
| PG124 | Q WING 10mm WING BOLTS | MINOR | 22.5.97 |
| AX/PG126 | ALL 12V AIRCRAFT BSM INDICATOR | MINOR | 28.5.97 |
| AX/PG127 | BRAKE RETURN SPRING ADDED | MINOR | 28.5.97 |
| PG151 | QTM/QSR LTS FUEL GAUGE | MINOR | 5.2.98 |
| PG177 | LTS FUEL GAUGE FOR PRODUCTION | MINOR | 8.6.98 |
| PG/AX252 | LYNX KIT FITTING | MINOR | 7.1.99 |
| PG254 | QUASAR SUSPENSION RUBBER MATERIAL | MINOR | 15.1.99 |
| PG/AX279 | NON PVC FUEL HOSES | MINOR | 9.3.99 |
| PG287 | USE Q2 CROSS BOOM ON Q1 WINGS | MINOR | 28.4.99 |
| PG323 | QUASAR UNDERCARRIAGE LAYUP | MINOR | 14.12.99 |
| PG353 | FITTING OF NOSE WEBBING ONTO Q1 WING | MINOR | 14.12.99 |

CIVIL AVIATION AUTHORITY – SAFETY REGULATION GROUP

MICROLIGHT TYPE APPROVAL DATA SHEET (TADS)

**NO:BM38 ISSUE: 3**

ANNEX C

WEIGHING INFORMATION

1. The CG of the trike is not critical as it only affects the speed range, not the trim.
2. No significant masses should be attached to the wing.

Empty weight of the whole aircraft must not exceed 180kg.

ANNEX D
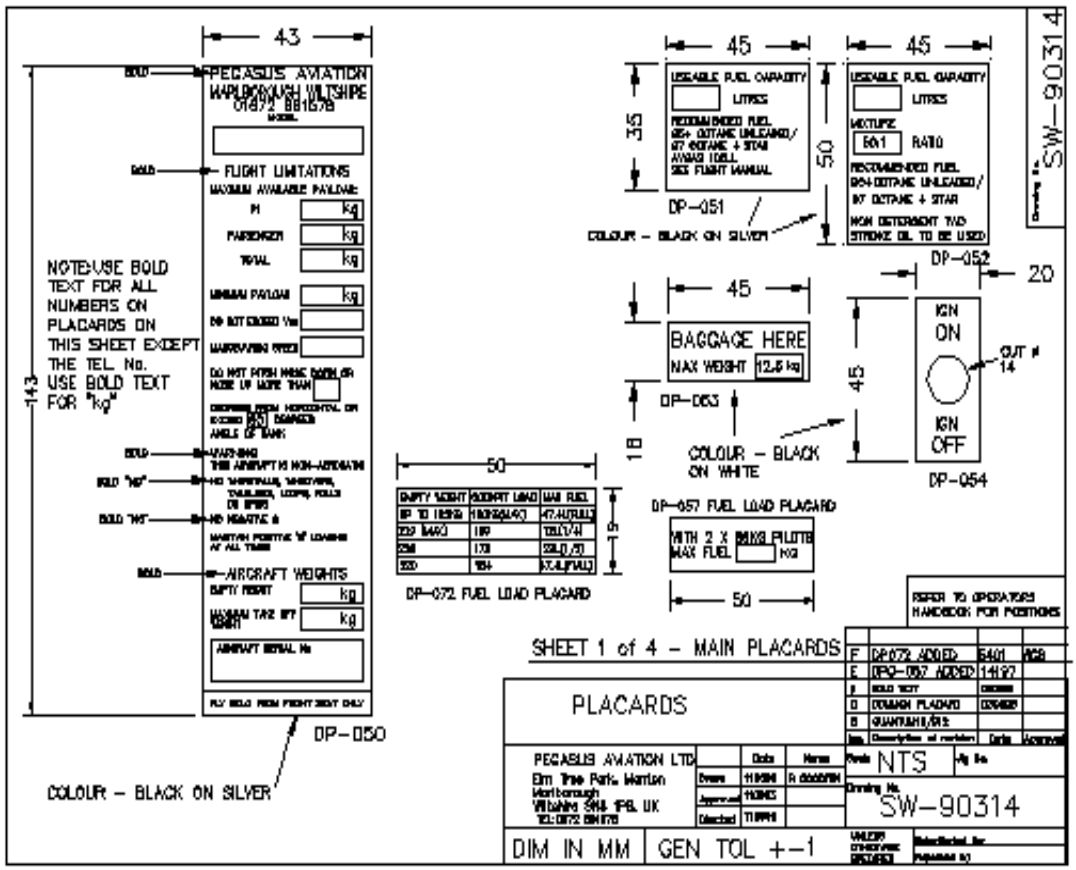
EXAMPLE PLACARDS