CIVIL AVIATION AUTHORITY – SAFETY REGULATION GROUP

MICROLIGHT TYPE APPROVAL DATA SHEET (TADS)

NO: BM-68 ISSUE: 9

TYPES: **Ikarus C42 FB80 and Ikarus C42 FB80 Bravo**
Ikarus C42 FB100 and Ikarus C42 FB100 Bravo

(1) MANUFACTURER: Red-Air UK, The Yak Hangar, Wolverhampton Halfpenny Green Airport, Bobbington, Staffordshire, DY7 5DY

(2) UK IMPORTER: N/A

(3) CERTIFICATION: BCAR Section S Issue 2 dated August 1999

(4) DEFINITION OF BASIC STANDARD: Build Standard Sheet referenced in Procedure P.01, "Control and Storage of Drawings, Configuration Control"

(5) COMPLIANCE WITH THE MICROLIGHT DEFINITION

(a)	MTOW	450 kg pre Performance Aviation Mod C42PAUK/001 472.5 kg post Performance Aviation Mod C42PAUK/001
(b)	No. Seats	2
(c)	Maximum Wing Loading	36 kg/m² at 450 kg
(d)	Vso	37 mph (32 kt) IAS at 450 kg
(e)	Permitted range of pilot weights	55 – 172 kg total, Max 120 kg per seat
(f)	Typical Empty Weight (ZFW)	257.5 kg
(g)	ZFW + 172 kg crew + 1 hr fuel (10 kg C42 FB 80 & 12.5 kg C42 FB 100)	439.5 kg C42 FB80 442 kg C42 FB100
(h)	ZFW + 86 kg pilot + full fuel (50 litres / 36 kg) (65 litres / 47 kg)	 379.5 kg 390.5 kg
(i)	Max ZFW at initial permit issue	C42 FB80 268 kg Pre Performance Aviation Mod C42PAUK/001 290.5 kg post Performance Aviation Mod C42PAUK/001 C42 FB100 265.5 kg pre Performance Aviation Mod C42PAUK/001 288 kg post Performance Aviation Mod C42PAUK/001

Note: References in this TADS to C42 FB 80 and C42 FB100 must also be taken to include C42 FB80 Bravo and C42 FB100 Bravo respectively unless otherwise stated. The Bravo models are introduced by Performance Aviation Mod C42PAUK/002 and approved by AAN BMAA-1045.

(6) POWER PLANTS

Designation	*C42 FB80*	*C42 FB80*	*C42 FB80*	*C42 FB80*	*C42 FB80*	*C42 FB80 Bravo* *Serial No: 1110-7175*
Engine Type	*Rotax 912 UL*	*Rotax 912 UL*	*Rotax 912 UL*	*Rotax 912 UL*	*Rotax 912 UL*	*Rotax 912 UL*
Reduction Gear	*2.27:1*	*2.27:1*	*2.27:1*	*2.27:1*	*2.27:1*	*2.27:1*
Exhaust System	*Heggerman*	*Heggerman*	*Heggerman*	*Heggerman*	*Heggerman*	*Heggerman*
Intake System	*Twin carburettor*	*Twin carburettor*	*Twin carburettor*	*Twin carburettor*	*Twin carburettor*	*Twin carburettor*
Propeller Type	*Warp Drive 2 blade*	*Ecoprop 170R 110/3 3 blade*	*Warp Drive 3 blade*	*Neuform Fixed Pitch 3 blade*	*Kiev prop 263/1700 3 blade*	*Kiev prop 263/1700 3 blade*
Propeller Dia x Pitch	*68" x 25° @ 400 mm from hub edge*	*170 cm x 20º @ 75% radius*	*68" x 21° @ 400 mm from hub edge*	*175 cm x 23º @ 310 mm from hub edge*	*170 cm x 24º @ 350 mm radius*	*170 cm x 24º @ 350 mm radius*
Noise Type Cert No.	*179M*	*179M*	*179M*	*179M*	*179M*	*179M*
AAN approving configuration	*27832*	*27832*	*29023*	*29073 Addendum 1*	*BMAA - 1047*	*29359*

Designation	*C42 FB100*	*C42 FB100*	*C42 FB100*	*C42 FB100*	*C42 FB100*	*C42 FB100*
Engine Type	*Rotax 912 ULS*	*Rotax 912 ULS*	*Rotax 912 ULS*	*Rotax 912 ULS*	*Rotax 912 ULS*	*Rotax 912 ULS*
Reduction Gear	*2.43:1*	*2.43:1*	*2.43:1*	*2.43:1*	*2.43:1*	*2.43:1*
Exhaust System	*Heggerman*	*Heggerman*	*Heggerman*	*Heggerman*	*Heggerman*	*Heggerman*
Intake System	*Twin carburettor*	*Twin carburettor*	*Twin carburettor*	*Twin carburettor*	*Twin carburettor*	*Twin carburettor*
Propeller Type	*Warp Drive 3 blade*	*Ecoprop 170R 130/3 3 blade*	*GSC Tech-III 3 blade*	*Neuform Fixed Pitch 3 blade*	*Neuform Variable Pitch 3 blade*	*Kiev Prop 283/1800 3 blade*
Propeller Dia x Pitch	*68" x 25° @ 400 mm radius*	*170 cm x 20º @ 75% radius*	*68" x 25° @ 400 mm from hub edge*	*175 cm x 27º @ 310 mm from hub edge*	*180 cm x 24 to 31º @ 310 mm from hub edge*	*180 cm x 24º @ 485 mm radius*
Noise Type Cert No.	*179M*	*179M*	*179M*	*179M*	*179M*	*179M*
AAN approving configuration	*27832 Addendum 1*	*27832 Addendum 1*	*27832 Addendum 1*	*29073*	*29089*	*BMAA-1044*

(7) MANDATORY LIMITATIONS:

(a)	Max Take-Off Weight		450 kg pre Performance Aviation Mod C42PAUK/001 472.5 kg post Performance Aviation Mod C42PAUK/001	
(b)	CG Limits			
		Aft Limit	560 mm aft of datum	
		Fwd Limit	350 mm aft of datum	below 450 kg
			366 mm aft of datum	above 450 kg
(c)	CG datum		Wing Leading Edge	
(d)	Cockpit Loadings		Total	
		Min	55 kg	
		Max	172 kg	
			Max 120 kg per seat	
(e)	Never Exceed Speed		139 mph (121 kt) IAS 103 mph (90 kt) IAS Post Aerosport Mod. C42/019, Flying Without Doors	
(f)	Manoeuvring Speed		94 mph (82 kt) IAS 80 mph (70 kt) IAS Post Aerosport Mod. C42/019, Flying Without Doors	
(g)	Permitted Manoeuvres		Maximum bank angle 60º Non Aerobatic Normal acceleration limits, +4g / -2g	
(h)	Fuel Contents (Max Usable)		50 litres (Pre Aerosport Mods C42/005 and /011) 65 litres (Post Aerosport Mod C42/011) 100 litres (Post Aerosport Mod C42/005)	

(i) Power Plant

Engine	Rotax 912 UL	Rotax 912 ULS
Max RPM	5800	5800
MAX CHT	150 ºC	135 ºC
MAX EGT	N/A	N/A
Fuel Spec	Unleaded MOGAS Minimum Fuel Grade MON 83, RON 91, AKI 87 AVGAS 100LL Avoid prolonged use of AVGAS	Unleaded MOGAS Minimum Fuel Grade MON 85, RON 95, AKI 91 AVGAS 100LL Avoid prolonged use of AVGAS
Engine Oil Spec	API Class SF or SG	API Class SF or SG
Gearbox oil spec	N/A	N/A
Fuel/Oil Mix	N/A	N/A
Coolant Temperature	N/A	N/A
Oil Pressure	2 to 5 bar	2 to 5 bar
Oil Temperature	50 ºC to 140 ºC	50 ºC to 130 ºC
Fuel Pressure	N/A	N/A

(8) INSTRUMENTS REQUIRED:

ASI	Altimeter	RPM	CHT	Oil Temperature	Oil Pressure	Compass	VSI	Slip ball
Required (0 to 150 mph / 130 kt min.)	Required	Required 0-6000 rpm	Required	Required	Required	Optional	Optional	Optional

(9) CONTROL DEFLECTIONS:

Elevator UP:	30º ± 3º	Tailplane trim tab UP:	1º to 5º (relative to elevator)
Elevator DOWN:	20º ± 3º	Tailplane trim tab DOWN	25º ±3º (relative to elevator)
Ailerons UP:	20º ± 2º	Rudder LEFT:	32º ± 3º
Ailerons DOWN:	14º ± 2º	Rudder RIGHT:	32º ± 3º
Flaps (DOWN):	4.5º, 15º and 42º	(relative to the fuselage tube)	

(10) PILOT'S NOTES, MAINTENANCE MANUALS REFERENCES:

10.1 Manuals approved for use with this aircraft

C42 Owner's Manual	OHB/C42/001
Neuform Variable Pitch Propeller, Assembly and Maintenance Manual	NAM/C42/001
Neuform Variable Pitch Propeller, Operating Manual	NOM/C42/001

10.2 The following placards are to be fitted:-

(a) Flight Limitations Placard (to be visible to pilot)

See Annex D.

(b) Engine Limitations Placard (to be located near to engine instruments)

See Annex D.

(c) Fuel Limitations Placard (to be located near to filler cap)

See Annex D.

(d) Switches

See Annex D.

(e) Parachute System

See Annex D.

(11) MANDATORY MODIFICATIONS / SERVICE BULLETINS / AIRWORTHINESS DIRECTIVES ETC:

See Annex A for required modifications.

(12) MINIMUM PERFORMANCE AT MAX TAKE-OFF WEIGHT (450 kg)

Rate of Climb:	C42 FB80	700 fpm at 70 mph (60 kt) IAS.
	C42 FB100	1000 fpm at 70 mph (60 kt) IAS.
Stall or Minimum Flying Speed:	37 mph (32 kt) IAS at MTOW / idle / full flap.	

Issue History

Issue No.		Reason and signatory
1	20/10/03	Initial Issue.
2	18/12/03	Ikarus C42 FB80 now approved by AAN 27832. Note deleted from page 1. OSB 16 added to Annex A.
3	02/11/04	Flybuy Ultralights Ltd address amended. Warp Drive 3 blade propeller added as alternative for C42FB 80. OSB 18 added to Annex A.
4	11/01/05	65 Litre Fuel Tank, Modification C42/011, added.
5	10/10/05	Company name and address changed. Neuform Fixed Pitch 3 blade propeller added as alternative for C42 FB100, Modification C42/006. Falcon Artificial Horizon, Modification C42/003 added. Samsonite Luggage Case, Modification C42/004 added. Additional 50 Litre Fuel Tank, Modification C42/005 added. Vertical Card Compass, Modification C42/012 added. Filser ATR 500 Transceiver, Modification C42/016 added. Filser TRT 600 Transponder, Modification C42/017 added. Flying Without Doors, Modification C42/019 added. Seat Load Limit Increase to 120 kg, Modification C42/020 added. Filser ATR 600 Transceiver, Modification C42/022 added.
6	06/12/05	Neuform Variable Pitch 3 blade propeller added as alternative for C42 FB 100, Modification C42/007. Neuform Fixed Pitch 3 blade propeller added as alternative for C42 FB 80, Modification C42/027. Minimum Performance values in para (12) amended.
7	10/03/11	Company name and address changed. Flybuy, Aerosport or Performance Aviation added as descriptor to various modifications. Flap Deflections added to paragraph (9). OSB 24 and OSB 25 added to Annex A. References to Performance Aviation Mods C42PAUK/001 to /005 added. Parachute System Placards added to Annex D.
8	13/04/11	Reference to Performance Aviation Mods: C42PAUK/006 and /012 added.
9	08/08/12	Company name and address changed. C42 FB80 Bravo Serial No. 1110-7175 added to paragraph (6).

N J Davis

Illustration of Aircraft - 3 View

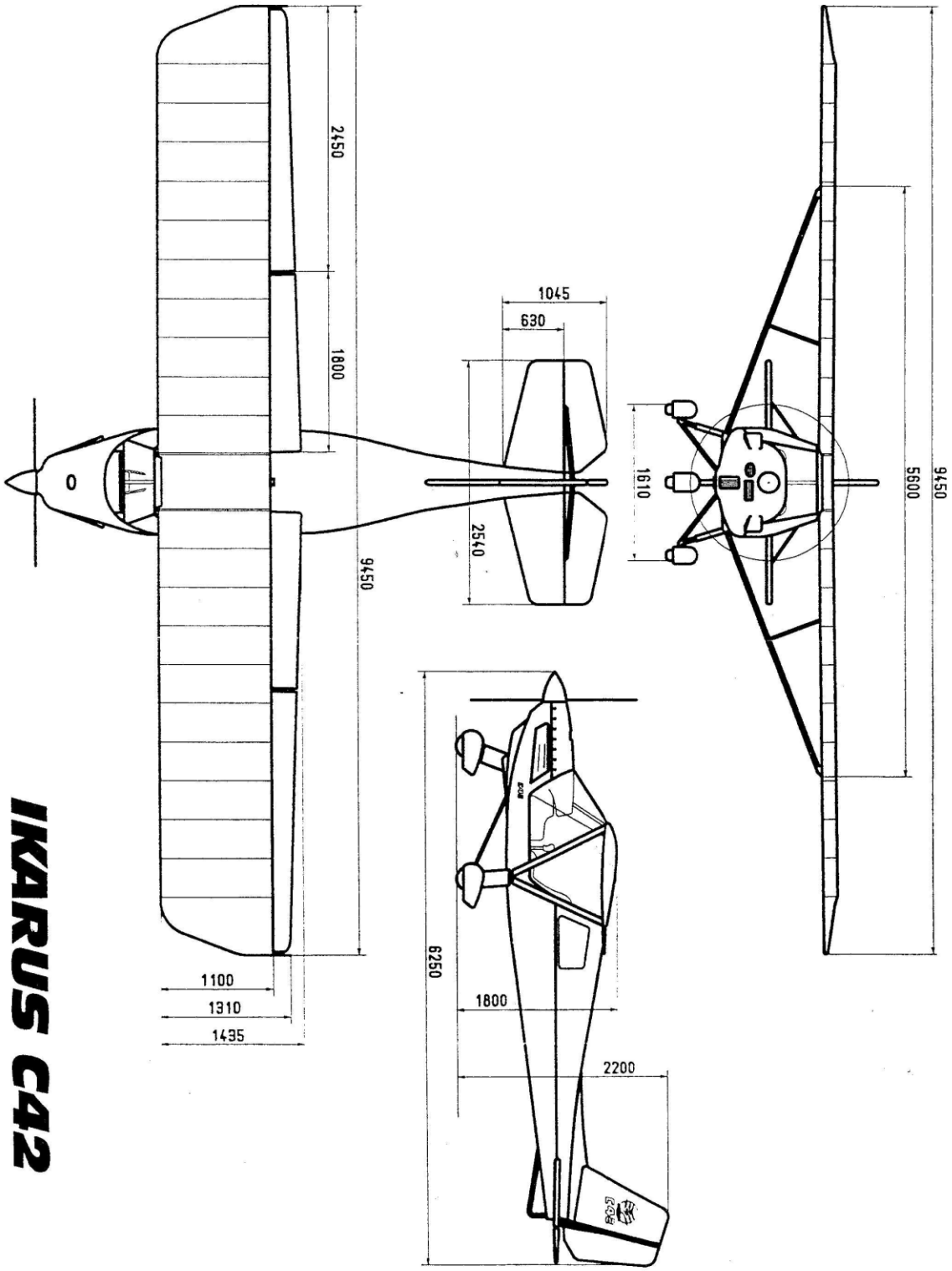

ANNEX A – MANDATORY MODIFICATIONS / SERVICE BULLETINS

Flybuy Owners Service Bulletin	OSB 16	Elevator Horn Cracking
Flybuy Owners Service Bulletin	OSB 18	Stub Axle Cracking
Aerosport Owners Service Bulletin	OSB 24	Rudder Horn Bolt Clearance
Aerosport Owners Service Bulletin	OSB 25	Wing Root Rib Weld Cracking

ANNEX B - APPROVED OPTIONAL MODIFICATIONS

The installation of all optional modifications is to be inspected by an inspector from an Organisation approved by the CAA for the purpose and an entry made in the appropriate logbook(s). Note that other approved modifications may exist which are not listed here.

Flybuy/Aerosport Optional Modifications

1.	Landing Light	42UKA11.10.00
2.	Strobe	42D03.05.00
3.	MIPS	42E10.02
4.	Composite Wing Tips	42CA00
5.	Folding Wings	42A07.00
6.	Microair 760 VHF COM (CAA Approval LA 301068) and Lynx Intercom	42J01A01.00
7.	Provision for ICOM A22E or ICOM A3 VHF COM and Lynx Intercom	42J01A01.01
8.	Microair T2000 Transponder (CAA Approval VC 01206)	42J02A01.00
9.	65 Litre Fuel Tank	C42/011
10.	Falcon Artificial Horizon	C42/003
11.	Samsonite Luggage Case	C42/004
12.	Additional 50 Litre Fuel Tank	C42/005
13.	Vertical Card Compass	C42/012
14.	Filser ATR 500 Transceiver	C42/016
15.	Filser TRT 600 Transponder	C42/017
16.	Flying Without Doors	C42/019
17.	Seat Load Limit Increase to 120 kg	C42/020
18.	Filser ATR 600 Transceiver	C42/022

Performance Aviation Optional Modifications

19.	472.5 kg Weight Increase (an approved Parachute System must also be fitted)	C42PAUK/001
20.	Introduction of Ikarus C42 FB80 Bravo and Ikarus C42 FB100 Bravo	C42PAUK/002
21.	Junkers Reserve Parachute	C42PAUK/003
22.	Beringer Brakes	C42PAUK/004
23.	Kiev 283/1800 Propeller	C42PAUK/005
24.	Galaxy Reserve Parachute	C42PAUK/006
25.	Kiev 263/1700 Propeller	C42PAUK/012

ANNEX C - WEIGHING INFORMATION

1.	CG Datum:	Wing Leading Edge
2.	Weighing attitude:	Stabiliser horizontal
3.	Mainwheel moment arm:	See Owner's Manual for individual aircraft
4.	Nosewheel moment arm:	See Owner's Manual for individual aircraft
5.	Fuel moment arm:	950 mm aft of datum
6.	Crew moment arm:	400 mm aft of datum
7.	Crew weights:	Minimum 55 kg / maximum 172 kg
8.	Aft CG Limit:	560 mm aft of datum
9.	Fwd CG Limit:	350 mm aft of datum below 450 kg 366 mm aft of datum above 450 kg

ANNEX D

EXAMPLE PLACARDS

(a) Flight Limitations Placards (to be visible to pilot)

V_{NE}	139 mph (121 kt)
V_{FE}	72 mph (63 kt)

Flying Without Doors
V_{NE} 103 mph (90 kt)
V_A 80 mph (70 kt)

This aircraft has not been certified to an international requirement.
Aerobatics and spinning prohibited.
Flight by day and in VFR only.
Smoking prohibited.

Empty weight *	
Date of Weighing	
Max. Weight ***	**450 kg**
Max cockpit load	**172 kg**
Min. cockpit load	**55 kg**
Max. load per seat	**120 kg**
Max. permitted fuel at max. cockpit load **	**litres**
Max. permitted cockpit load with max. fuel **	**kg**

* This must match the most recent W&CG report for the aircraft.
** Actual values to be entered following the most recent W&CG report for the aircraft
*** 472.5kg with Mod. C42PAUK/001 and an approved Parachute System.

(b) Engine Limitations Placard (to be located near to engine instruments)

For the 80hp:

RPM max. (5 mins)	5800 rpm
RPM max. continuous	5500 rpm
Oil pressure	2 – 5 bar
Oil Temp.	Min. 50°C
Oil Temp.	Max. 140°C
CHT	Max. 150°C

For the 100hp:

RPM max. (5 mins)	5800 rpm
RPM max. continuous	5300 rpm
Oil pressure	2 – 5 bar
Oil Temp.	Min. 50°C
Oil Temp.	Max. 130°C
CHT	Max. 135°C

(c) Fuel Limitations Placards

Usable Fuel Capacity 50 Litres
or
Usable Fuel Capacity 65 Litres
or
Usable Fuel Capacity 100 Litres

For the 80 hp Rotax:

Unleaded MOGAS
Minimum Fuel Grade
MON 83, RON 91, AKI 87
AVGAS 100LL
Avoid prolonged use of Avgas

For the 100 hp Rotax:

Unleaded MOGAS
Minimum Fuel Grade
MON 85, RON 95, AKI 91
AVGAS 100LL
Avoid prolonged use of Avgas

(d) Switches

All switches are to be marked with function and sense (up=on, down=off).

(e) Parachute System

Within pilots view:

Occupant Warning
The parachute recovery system installation has been approved by BMAA on the basis that, as far as is practicable to demonstrate, it will create no hazard to the aeroplane, its occupant(s) or ground personnel whilst the system is not deployed; and that when properly maintained, the risk of malfunction, deterioration or inadvertent deployment is minimised. The BMAA has not approved the system itself or considered the circumstances, if any, in which it might be deployed. The effectiveness of the system for the safe recovery of the aeroplane has not been demonstrated.

Close to deployment handle:

WARNING – EMERGENCY PARACHUTE
Pull Handle Firmly to Deploy
Unapproved Equipment - see Pilot's Handbook

On exterior of aircraft, close to parachute breakthrough panel:

DANGER

and:

Ballistic Recovery System