CIVIL AVIATION AUTHORITY – SAFETY REGULATION GROUP

MICROLIGHT TYPE APPROVAL DATA SHEET (TADS)

NO: BM-67 ISSUE: 4

TYPE: **EV-97 teamEurostar UK**

(1) MANUFACTURER: Cosmik Aviation Ltd, Burnside, Deppers Bridge, Southam, Warwickshire, CV47 2SU

(2) UK IMPORTER: N/A

(3) CERTIFICATION: BCAR Section S Issue 2 dated August 1999

(4) DEFINITION OF BASIC STANDARD: Build Standard Sheet included in Procedure P.01, "Control and Storage of Drawings"

(5) COMPLIANCE WITH THE MICROLIGHT DEFINITION

(a)	MTOW	450 kg
(b)	No. Seats	2
(c)	Maximum Wing Loading	45.7 kg/m²
(d)	Vso	40 mph CAS
(e)	Permitted range of pilot weights	55 – 172 kg total
(f)	Typical Empty Weight (ZFW)	265 kg
(g)	ZFW + 172 kg crew + 1 hr fuel (14 litres / 10 kg)	447 kg
(h)	ZFW + 86 kg pilot + full fuel (62 litres / 44.6 kg)	396 kg
(i)	Max ZFW at initial permit issue	268 kg

INVESTOR IN PEOPLE

(6) POWER PLANTS

Designation	**EV-97 teamEurostar UK**		
Engine Type	Rotax 912 UL	Rotax 912 UL	Rotax 912 UL
Reduction Gear	2.27:1	2.27:1	2.27:1
Exhaust System	Evektor	Evektor	Evektor
Intake System	Rotax (K & N) Filter	Rotax (K & N) Filter	Rotax (K & N) Filter
Propeller Type	VZLU V230C	GT-2/166/145 (Also identified as GT-2/166/VSR-FW101SRTC)	Kievprop 273/1700
Propeller Dia x Pitch	1625 mm dia. 18.5º @75% radius	1660 mm x 1450 mm	1702 mm dia 28º @ 350 mm radius
Noise Type Cert No.	175M	175M	175M
AAN approving configuration	28662	28662	29076

(7) MANDATORY LIMITATIONS:

(A) Max Take-Off Weight 450 kg

(B) CG Limits Aft limit 425 mm aft of datum
FWD Limit 250 mm aft of datum

(C) CG datum Wing Leading Edge

(D) Cockpit Loadings

	Total
Min	55 kg
Max	172 kg

(E) Never Exceed Speed 146 mph IAS

(F) Manoeuvring Speed 100 mph IAS

(G) Permitted Manoeuvres Maximum bank angle 60º
Non Aerobatic
Normal acceleration limits, +4g / -2g

(H) Fuel Contents (Max Usable) 62 litres

(I) Power Plant See Table

Engine	Rotax 912 UL
Max RPM	5800 for 5 minutes
Max Continuous RPM	5200 with VZLU or GT propeller 4800 with Kievprop propeller
MAX CHT	150ºC (120ºC if SB/EUR/006 has been implemented)
MAX EGT	N/A
Fuel Spec	90 RON minimum unleaded to EN228 AVGAS 100LL (not recommended for long term use)
Engine Oil Spec	API Class SF or SG, motor cycle oil with gear additives
Gearbox oil spec	N/A
Fuel/Oil Mix	N/A
Coolant Temperature	N/A
Oil Pressure	1.5 to 7 bar
Oil Temperature	50ºC to 140ºC
Fuel Pressure	0.15 to 0.4 bar

(8) INSTRUMENTS REQUIRED:

ASI	Altimeter	RPM	CHT	Compass	Oil temperature	Fuel Pressure	Oil pressure	Slip ball
0 to 150 mph	Required	0-7000 rpm	150ºC	Required	150ºC	0 – 1 bar	0 – 10 bar	Required

(9) CONTROL DEFLECTIONS:

Elevator UP:	25º ± 1º	Elevator trim tab UP:	5º ± 2º
Elevator DOWN:	20º ± 1º	Elevator trim tab DOWN	25º ± 5º
Ailerons UP:	20º ± 1º	Rudder LEFT:	30º ± 2º
Ailerons DOWN:	15º ± 1º	Rudder RIGHT:	30º ± 2º

(10) PILOT'S NOTES, MAINTENANCE MANUALS REFERENCES:

10.1 Manuals approved for use with this aircraft.

(a) Pilot's Operating Handbook POH/EUR/01 (including Supplement 01 when Kievprop propeller is fitted.)
(b) Maintenance Manual GEN/EUR/02

10.2 The following placards are to be fitted:-

(a) Flight Limitations Placard (to be visible to pilot)

See Annex D.

(b) Engine Limitations Placard (to be located near to engine instruments)

See Annex D.

(c) Fuel Limitations Placards

See Annex D.

(d) Switches

See Annex D.

(11) MANDATORY MODIFICATIONS / SERVICE BULLETINS / AIRWORTHINESS DIRECTIVES ETC:

See Annex A for required modifications.

Service Bulletin SB/EUR/005 Checking the Strength of the Lower Wing Spar Caps is classified as Essential, CAA MPD 2010-003 refers.

Service Bulletin SB/EUR/001 Coolant Overflow Bottle is classified as Recommended.
Service Bulletin SB/EUR/002 Trim Cable Clevis Pin Retainer is classified as Recommended.
Service Bulletin SB/EUR/004 Inspection and Rectification of Rudder Top Bearing is classified as Recommended.
Service Bulletin SB/EUR/006 Change of Cylinder Head Temperature Limit is classified as Recommended

(12) MINIMUM PERFORMANCE AT MAX TAKE-OFF WEIGHT

Rate of Climb: 800 fpm at 70 mph IAS.

Stall or Minimum Flying Speed: 36 mph IAS at MTOW / idle / full flap.

CIVIL AVIATION AUTHORITY – SAFETY REGULATION GROUP

MICROLIGHT TYPE APPROVAL DATA SHEET (TADS)

NO: BM-67 ISSUE: 4

Issue History

	Issue No.	Reason and signatory
1	25 July 2003	Initial Issue
2	9 March 2005	Kievprop propeller added as an alternative, see paras 6 & 10.1 and Annex D (b). Max Continuous RPM values added to para 7 (I). Service Bulletin SB/EUR/001 added to para 11.
3	11 March 2005	Para 6, pitch angle of Kievprop corrected to 28º.
4	7 April 2011	Para 7 (I), alternative max CHT added. Para 11, Service Bulletins SB/EUR/002, 003, 004 and 006 added. Annex D (b), alternative max CHT added. N J Davis

Illustration of Aircraft - 3 View

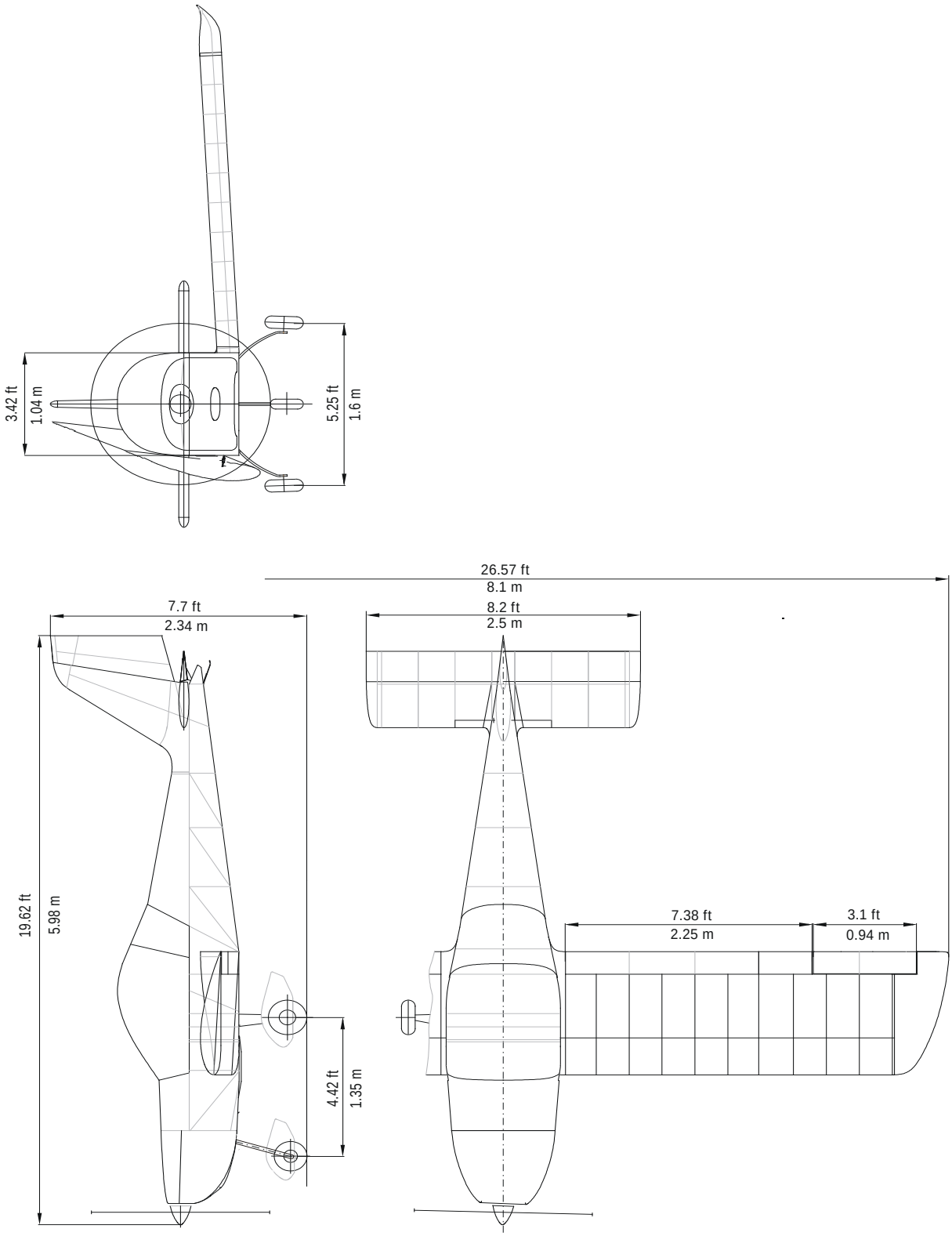

Illustration of Aircraft - Photograph

ANNEX A – MANDATORY MODIFICATIONS

None

ANNEX B - APPROVED OPTIONAL MODIFICATIONS

The installation of all optional modifications is to be inspected by an inspector from an Organisation approved by the CAA for the purpose and an entry made in the appropriate logbook(s). Note that other approved modifications may exist which are not listed here.

None

ANNEX C - WEIGHING INFORMATION

1.	CG Datum:	Wing Leading Edge
2.	Weighing attitude:	Pilot's Canopy Edge Horizontal
3.	Mainwheel moment arm:	See Maintenance Manual for individual aircraft
4.	Nosewheel moment arm:	See Maintenance Manual for individual aircraft
5.	Fuel moment arm:	920 mm aft of datum
6.	Crew moment arm:	500 mm aft of datum
7.	Baggage moment arm	1270 mm aft of datum
8.	Crew weights:	Minimum 55 kg / maximum 172 kg
9.	Aft CG Limit:	425 mm aft of datum
10.	Fwd CG Limit:	250 mm aft of datum

ANNEX D

EXAMPLE PLACARDS

(a) Flight Limitations Placards (to be visible to pilot)

AIRSPEEDS (IAS)

V_{NE} (Never exceed speed)	146 mph
V_A (Maximum manoeuvring speed)	100 mph
V_{FE} (Flaps extended max. speed)	77 mph
V_S (Stall speed, flaps extended)	36 mph

Flight limited to daytime VFR non-icing conditions.
Aerobatics and intentional spinning are prohibited.
This microlight aeroplane has not been approved to an internationally recognised airworthiness standard.

(b) Engine Limitations Placard (to be located near to engine instruments)

ENGINE LIMITATIONS

Maximum take-off (max. 5 minutes)	5800 rpm
Max. continuous	4800 or 5200 rpm*
Idle	approx. 1400 rpm
Max. CHT	150ºC**
Max. oil temp.	140ºC
Min. oil temp.	50ºC
Min. oil pressure	1.5 bar
Max. oil pressure	7.0 bar
Minimum fuel pressure	0.15 bar
Maximum fuel pressure	0.4 bar

* Depending on propeller fitted.
** 120ºC if SB/EUR/006 has been implemented.

(c) Fuel Limitations Placard

To be located in the cockpit

FUEL and LOAD LIMITS **Capacity 65 litres** **Unusable fuel 2.9 litres**	
Maximum take-off weight	**450 kg**
Max. empty weight	**268 kg**
Actual empty weight	**___kg***
Max. baggage weight	**15 kg**
Minimum Cockpit Load	**55 kg**
Cockpit Load incl. Baggage (kg)	**Max. Fuel Load (litres)****
172 (maximum)	14
160	31
150	44
140	58
135 or less	Full fuel

* This must match the most recent W&CG report for the aircraft.
** Typical values shown. Actual values to be entered following the most recent W&CG report for the aircraft.

To be located adjacent to the fuel filler

90 RON minimum MOGAS unleaded to EN 228; or AVGAS 100LL Prolonged use of 100LL should be avoided.

(d) Switches

All switches are to be marked with function and sense (up=on, down=off).